PARTS ILLUSTRATION
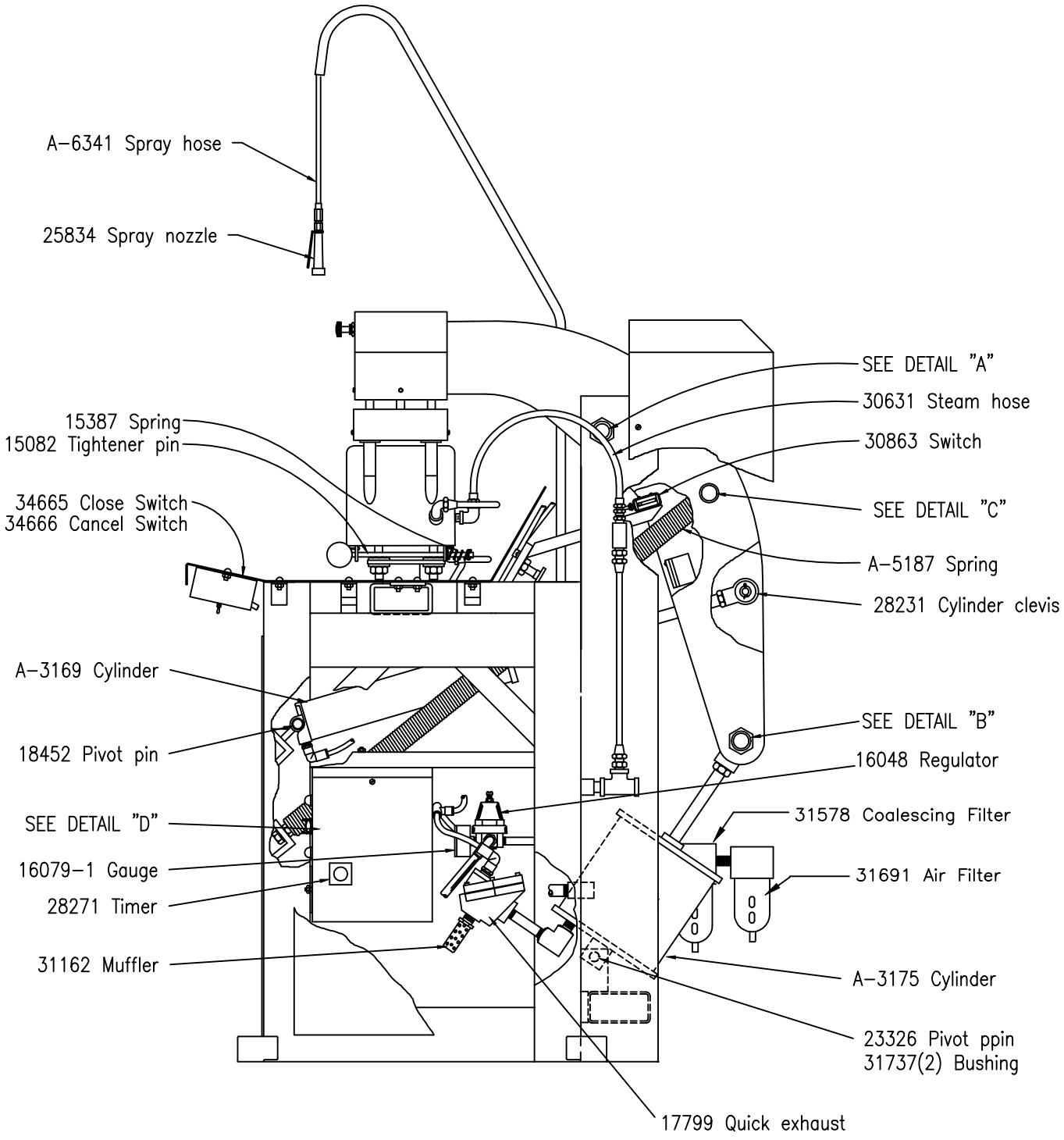
SIDE VIEW